Electric submersible pumps for sewage water
Double-Channel impeller

Code SM/50/700/1
Model SEMISOM 700/50 M

Performance Characteristics

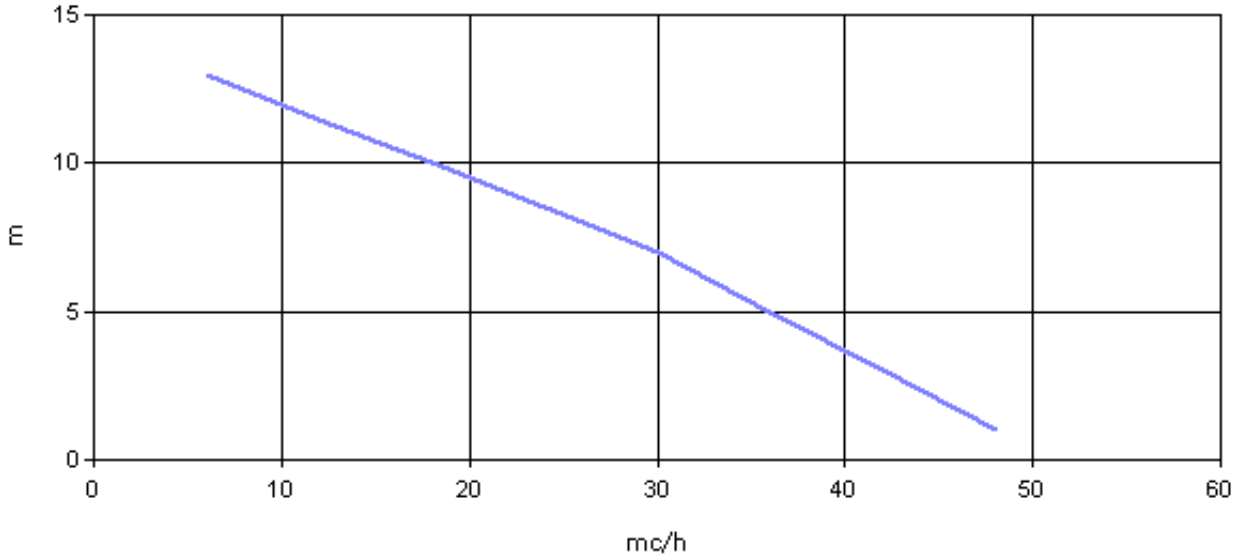

Flow	mc/h	0	6	12	18	24	30	36	42	48
Head	m	14	13	11,5	10	8,5	7	5	3	1

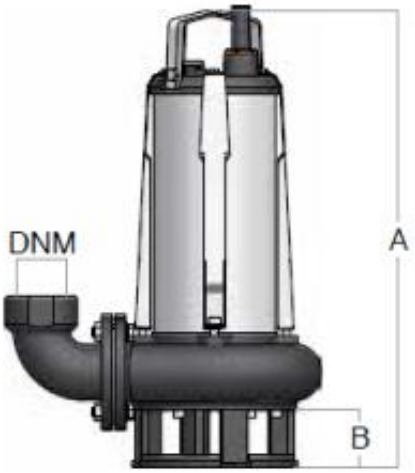

Nominal Characteristics 2 poles 50 Hz

Number of Phases	1	~
Voltage	230	V
Absorption	9,2	A Max
Power	1.5	HP
	1.1	KW
Capacitor	40	mF

Dimensions
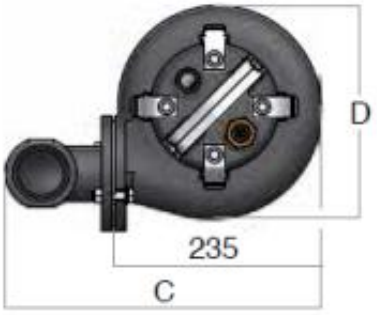
Solids passage	50	mm
DNM	2"	
A	518	mm
B	70	mm
C	354	mm
D	254	mm
Weight	32.5	Kg
Cable	10	m